8.05. Treetop House 300

All measures in cm (if not other stated).

M 1:80

Foundations need to be made after the production of our playgrounds due to the fact that we cannot guarantee information of the wood due to its irregular growth habits. Technical changes reserved. Please check the measures when our goods arrive. Our goods meet the standards of DIN EN 1176. For delivery is the offer text relevant.

Measures total:	approx. 290 x 240 x 480 (600) cm (L, W, H [H with depth below ground])
Fall areq:	approx. 7,9 x 7,4 m
Protective surface:	sand, grit, wooden chaffs
Foundation:	1 unit 150 x 150 x 120 cm (L, W, Depth) each +10 cm drainage-fine gravel layer, 3 units 40 x 40 x 80 cm (L, W, Depth)
Assembly and installation:	2 people/approx. 8 hrs
Weight:	in total approx. 1000 kg
Intended age group:	from approx. 5 years of age on

View:

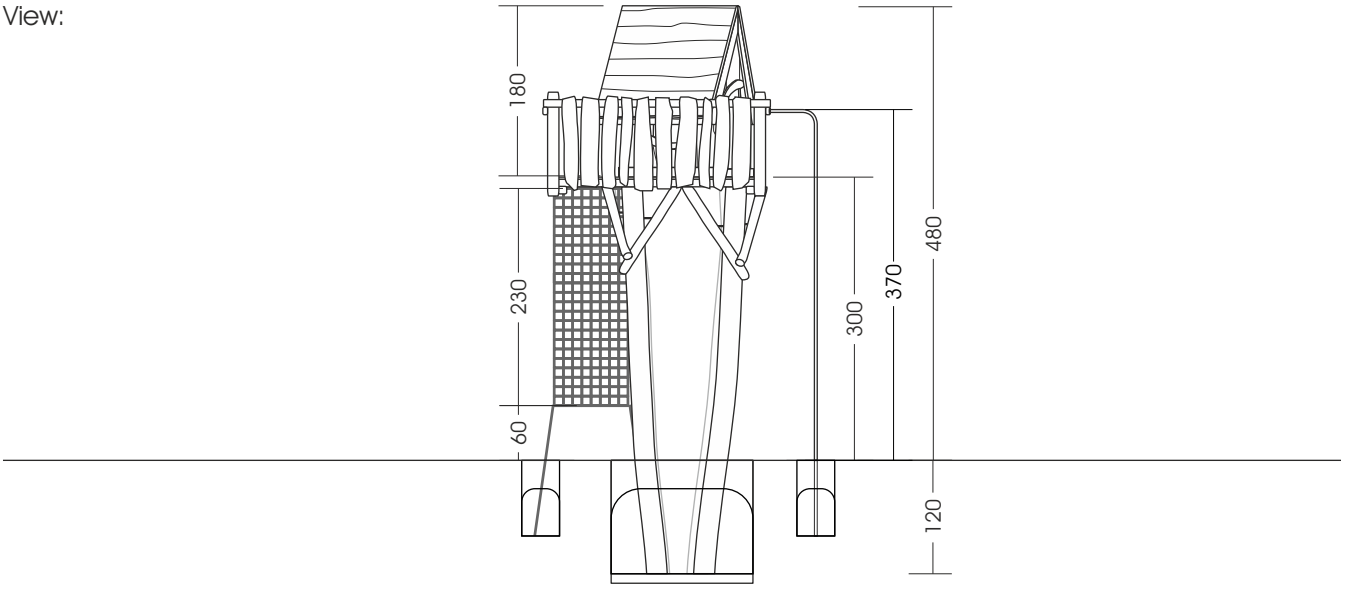

Top view:

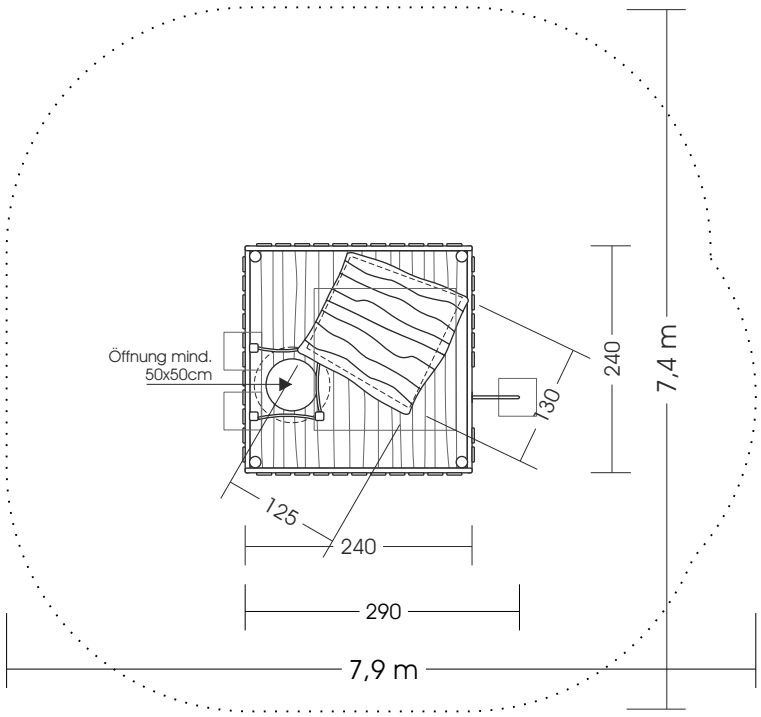

ziegler® FREIZEITANLAGEN E.K.
Spielplätze von A-Z

Am Dreieck 10, 04828 Zeititz I ✆ +49 3425 8543-0 I www.ziegler-spielplatz.de